OMEC towards 5GC

Confidentiality Notice

This GS Lab (Great Software Laboratory) artefact and/or document is strictly confidential. It contains proprietary information intended only for recipients. The recipient acknowledges and agrees that: (i) this artefact and/or document is not intended to be distributed ii) the recipient does not have the right to implement, copy, reproduce, fax, publicly divulge, or further distribute it, in whole or in part in any form, without seeking the express written permission from GS Lab. The artefact and/or document represents GS Lab's current product offerings and best practices which are subject to change without notice. All third-party trademarks used in this presentation belong to their respective owners and may be protected by law. This document only refers to such trademarks under the doctrines of nominative and descriptive fair usage to illustrate and explain concepts without implying violation of any legal constraints.

Core Design Considerations

- **Backward & Forward Compatibility**
- **Deployment consideration**
  - **Cloud native**
    - Getting to market faster
  - **Private Cloud/supports multi cloud providers**
    - need to consider/implement all the aspect of the dependent services scalability, ha etc.
- **Performance(TPS,PPS)**
- **Scalability. Horizontal/Vertical**
- **Load balancing/Slicing.**
- **High availability.**
  - restoration procedure
- **Security**
- **Infrastructure monitoring/logging(OSS).**
- **Troubleshooting tools**
- **Micro-services architecture**
  - All the components should be independent and should be loosely coupled.
  - Communication over REST or HTTP/2 or Message Bus (kafka)
  - DB/Cache cluster/replica.
  - Service discovery.

5GC SBA Architecture

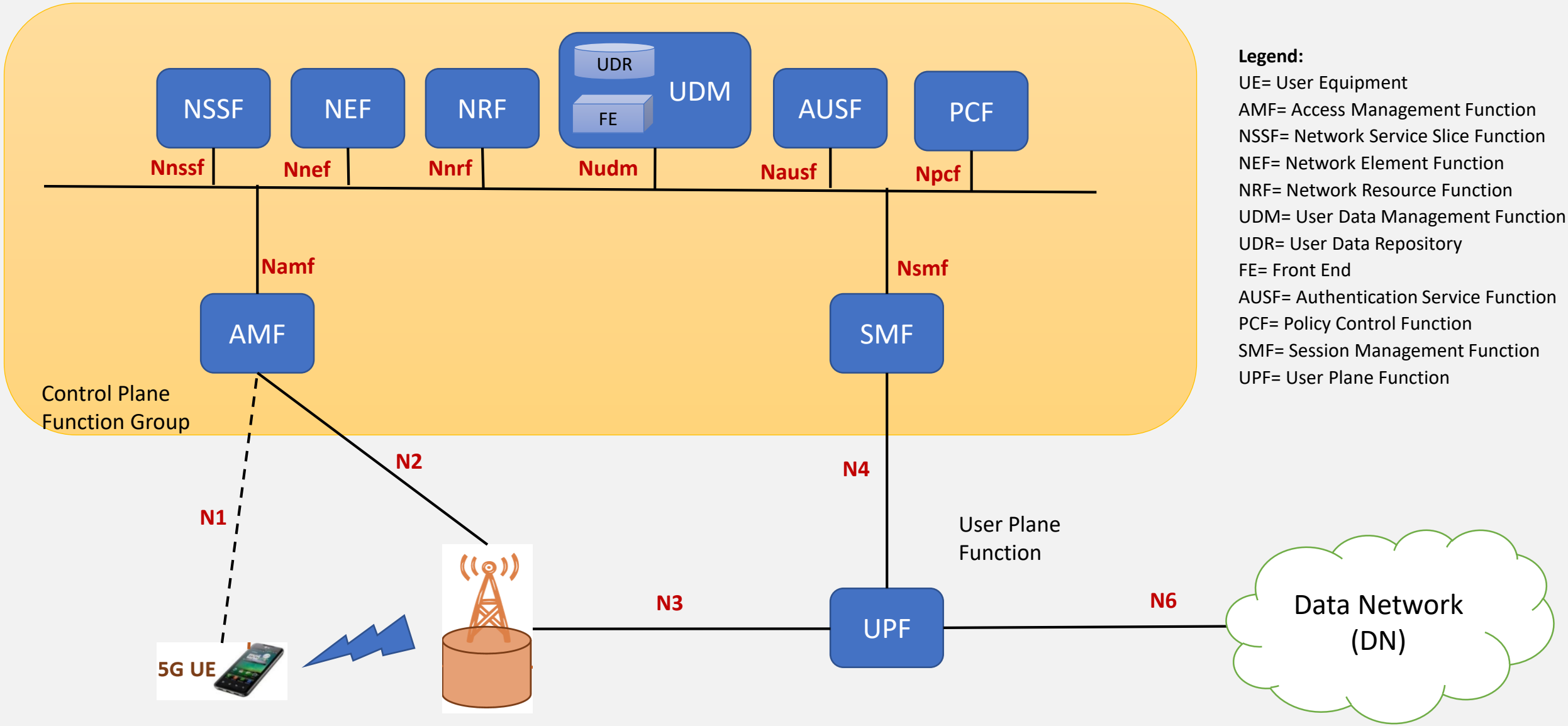

Legend:

UE= User Equipment
AMF= Access Management Function
NSSF= Network Service Slice Function
NEF= Network Element Function
NRF= Network Resource Function
UDM= User Data Management Function
UDR= User Data Repository
FE= Front End
AUSF= Authentication Service Function
PCF= Policy Control Function
SMF= Session Management Function
UPF= User Plane Function

5GC NF compared to 4G LTE Core

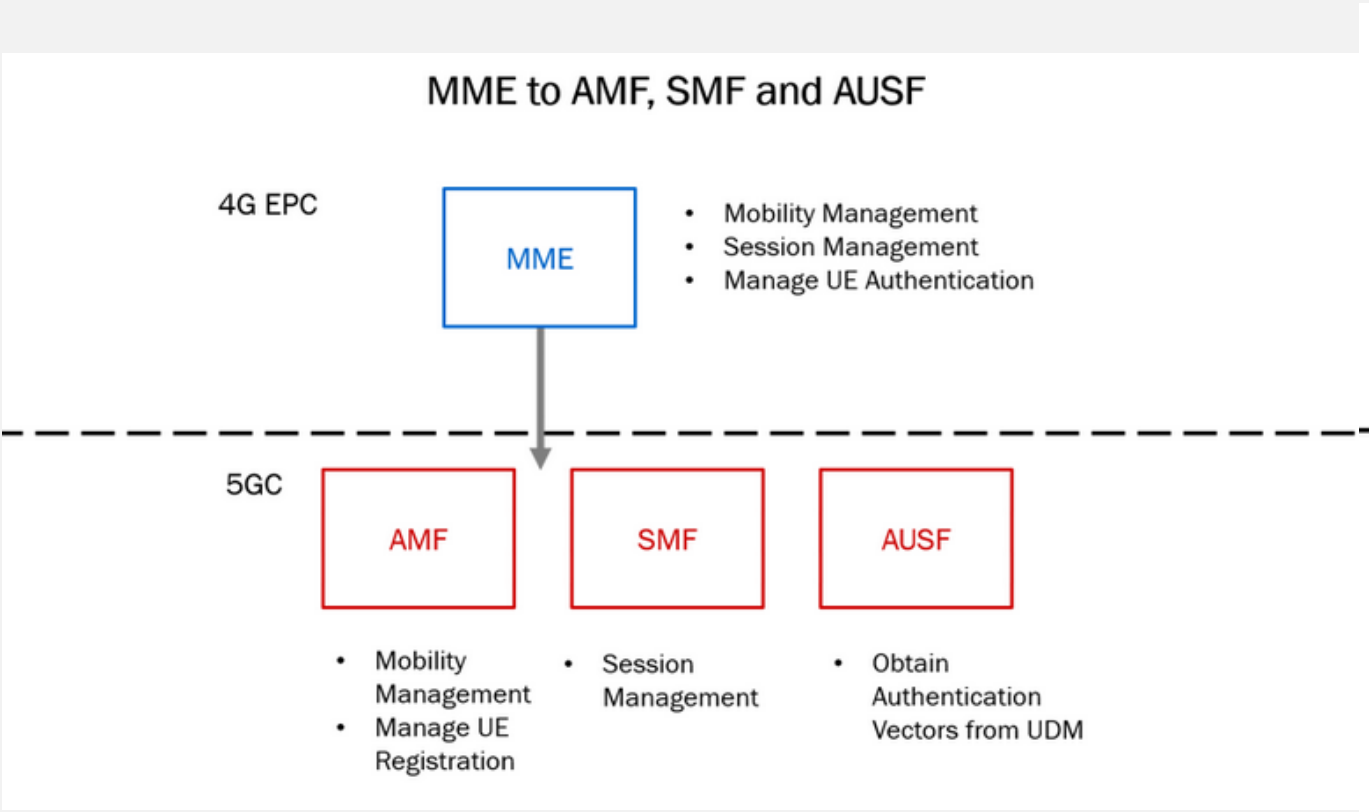

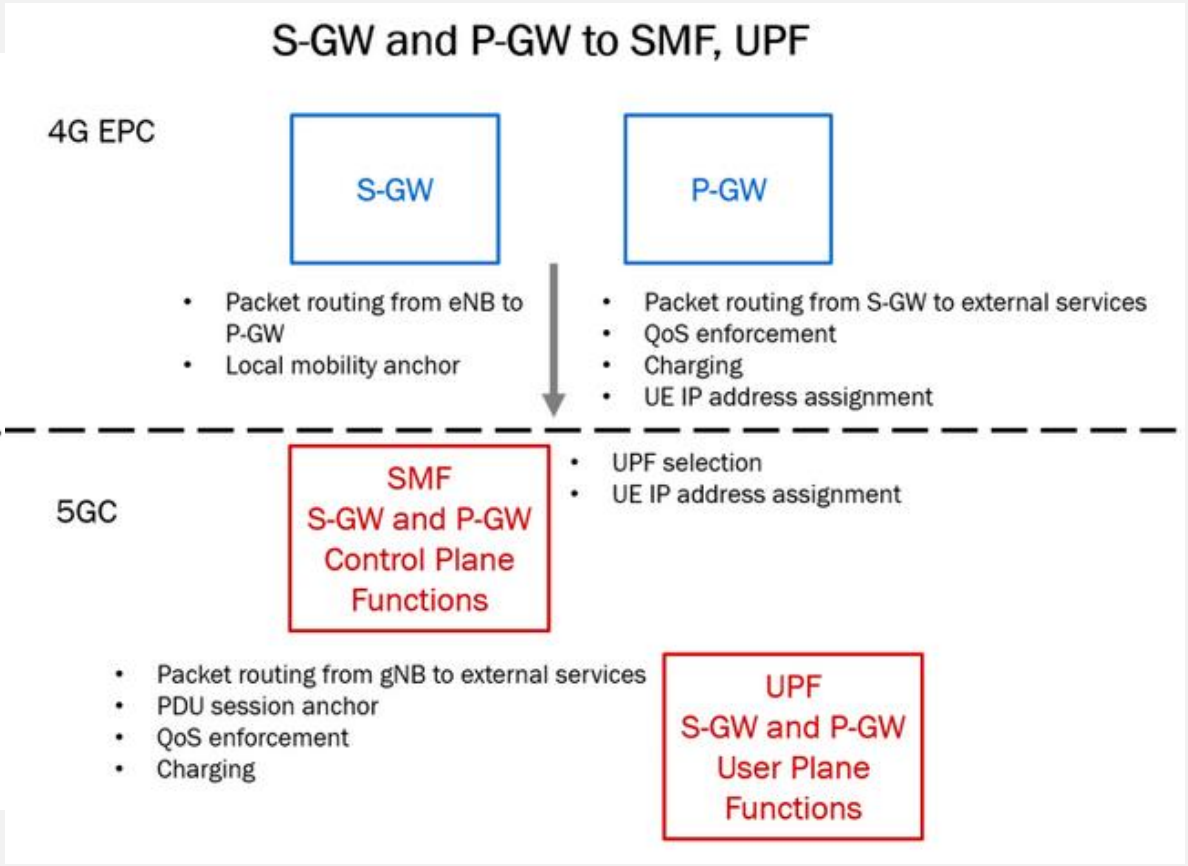

Reference : https://www.awardsolutions.com/portal/shareables/what-is-5G/5G-Training-Online/discover-5g-core-network-functions-compared-4g-lte

5GC AMF Reference Model

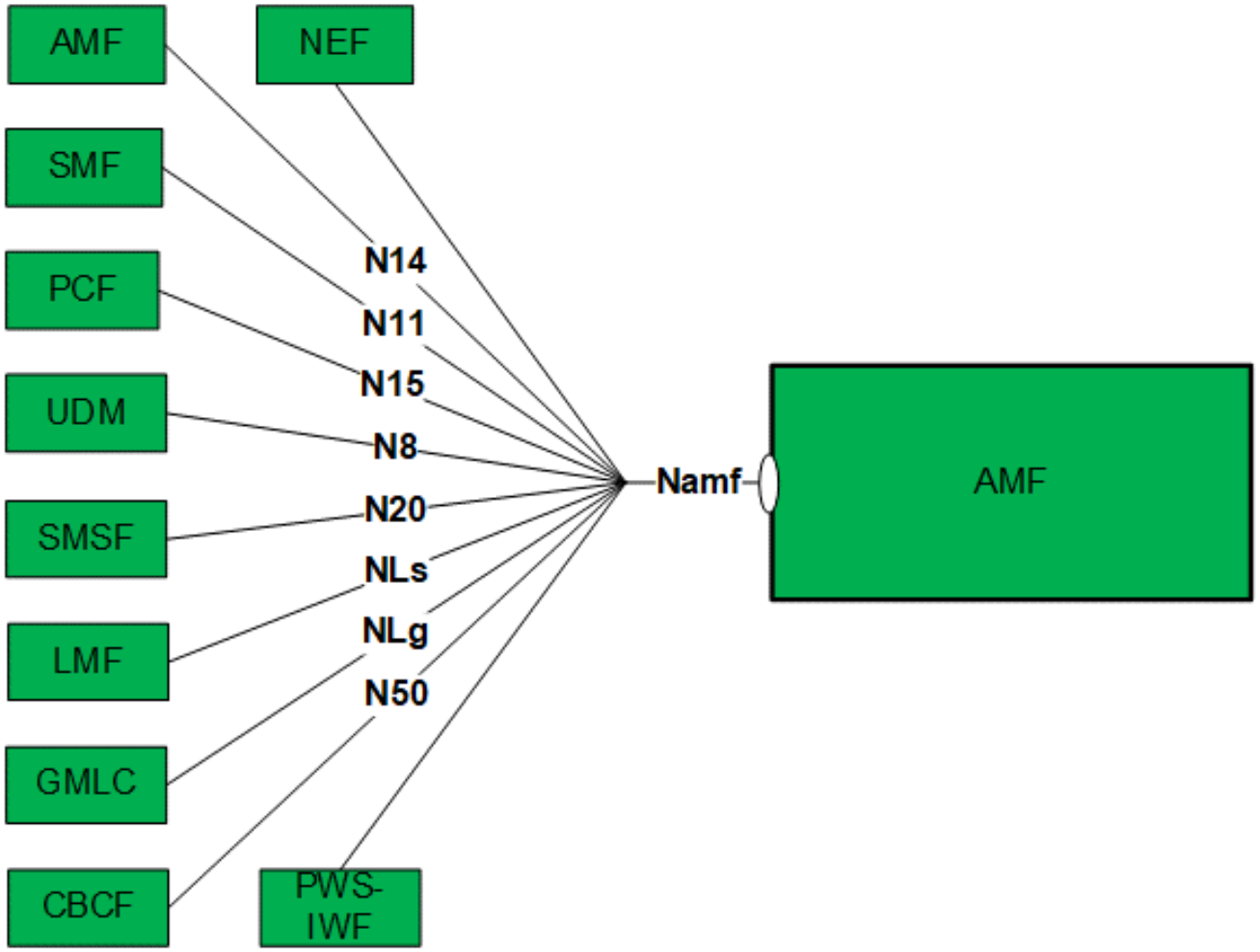

Figure 4.1-1: Reference model – AMF

OMEC MME to AMF : Phase I

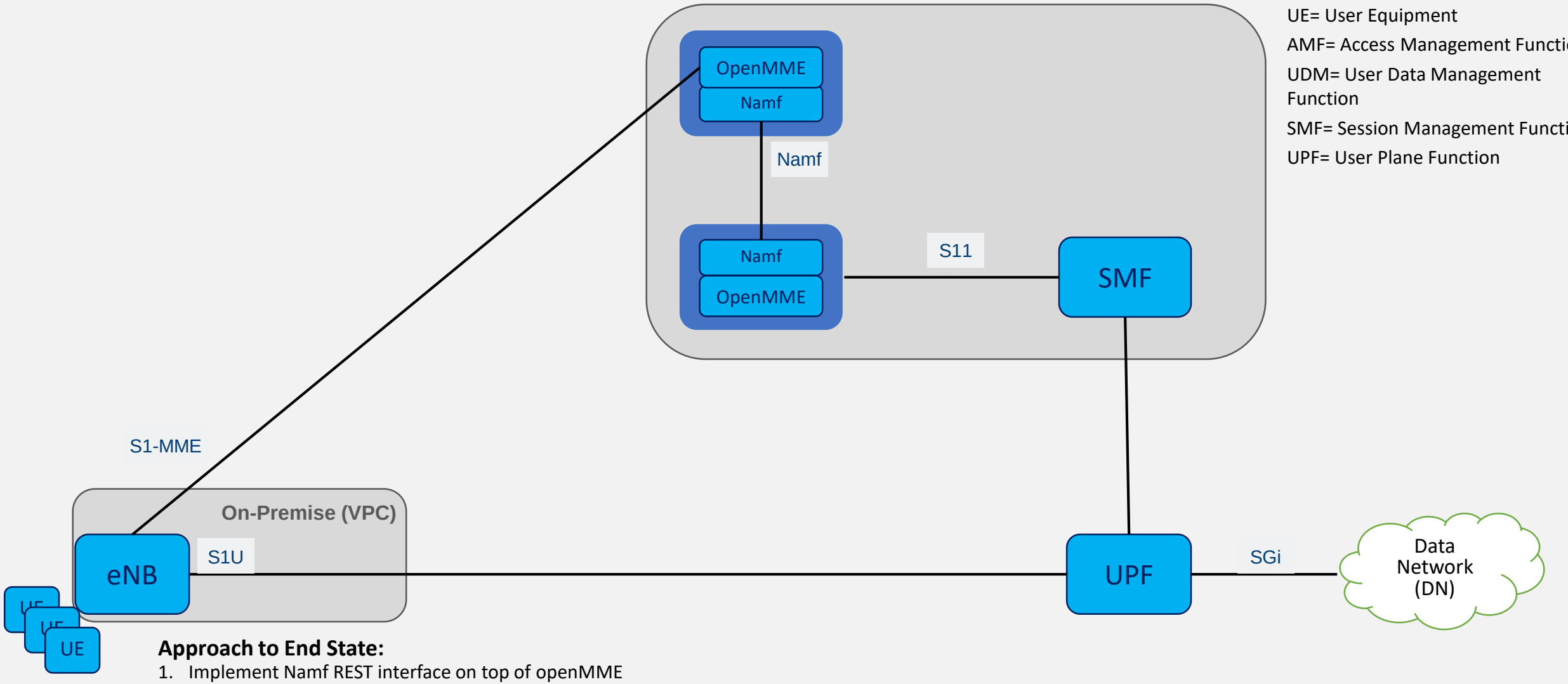

Legend:

UE= User Equipment

AMF= Access Management Function

UDM= User Data Management Function

SMF= Session Management Function

UPF= User Plane Function

Approach to End State:

1. Implement Namf REST interface on top of openMME
2. Keep S1-MME/S1AP,S11 unchanged
3. Next phase : implement N1/N2 - NGAP

AMF : Registration flow

4.2.2.2.2 General Registration

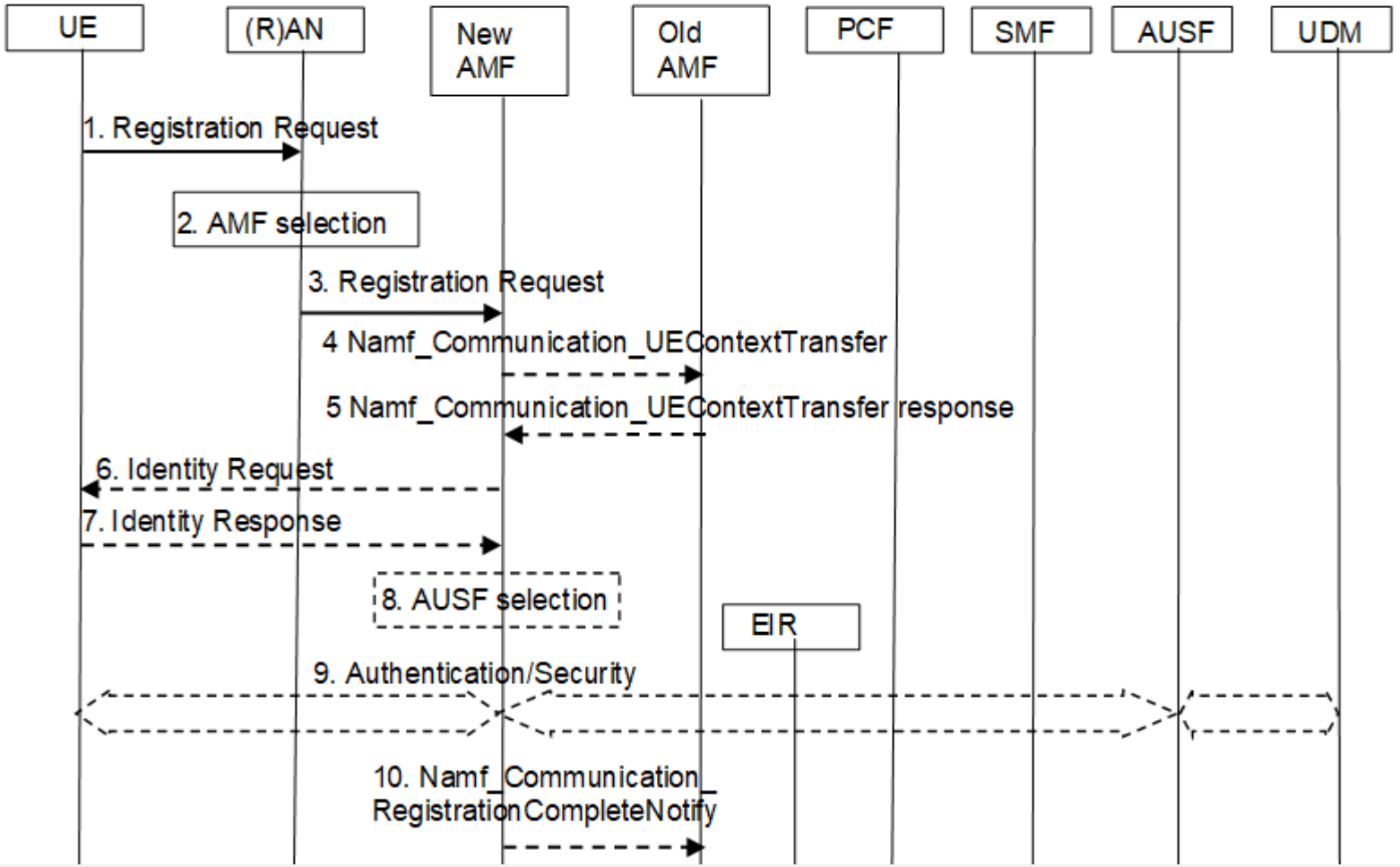

OMEC MME to AMF : Phase II

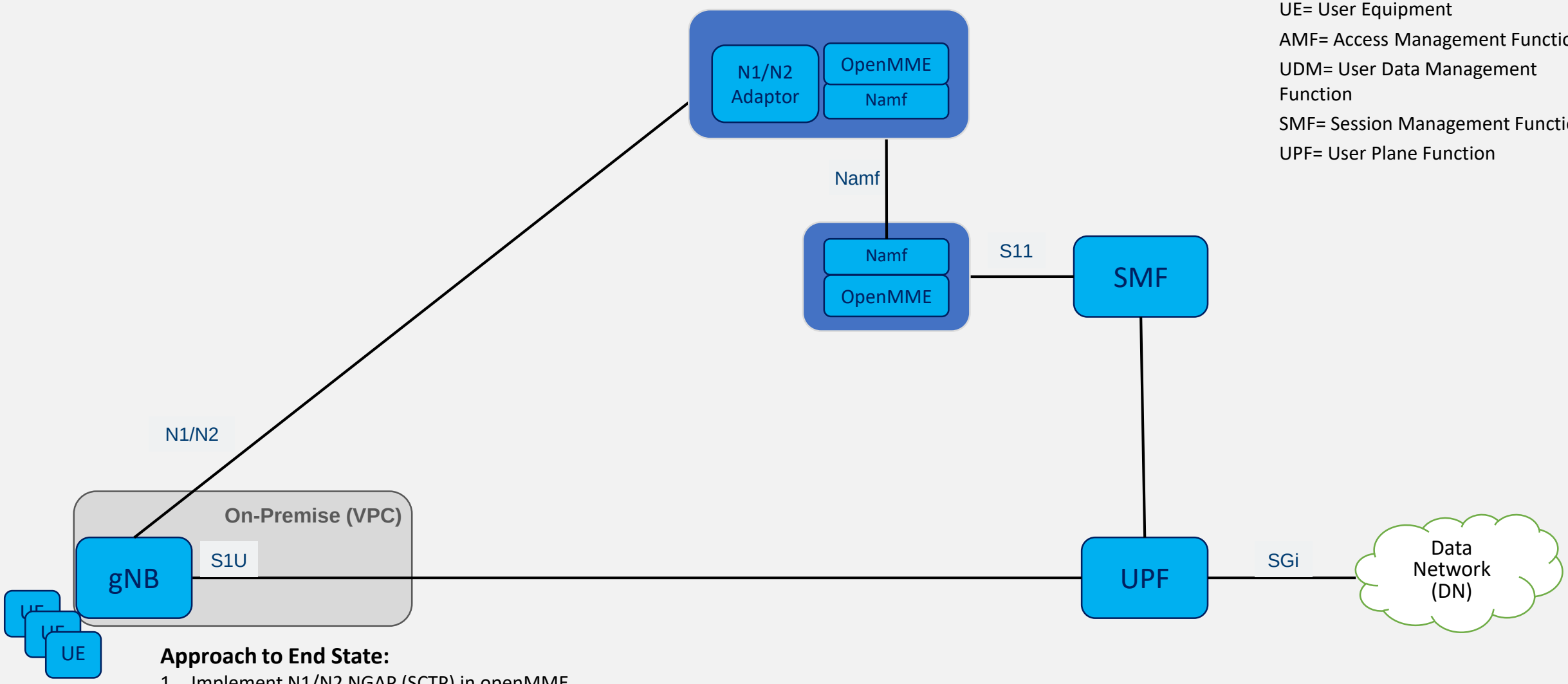

Legend:

UE= User Equipment

AMF= Access Management Function

UDM= User Data Management Function

SMF= Session Management Function

UPF= User Plane Function

Approach to End State:

1. Implement N1/N2 NGAP (SCTP) in openMME
2. Keep S1-MME/S1AP,S11 unchanged

OMEC HSS,DB to AUSF,UDM : Phase III

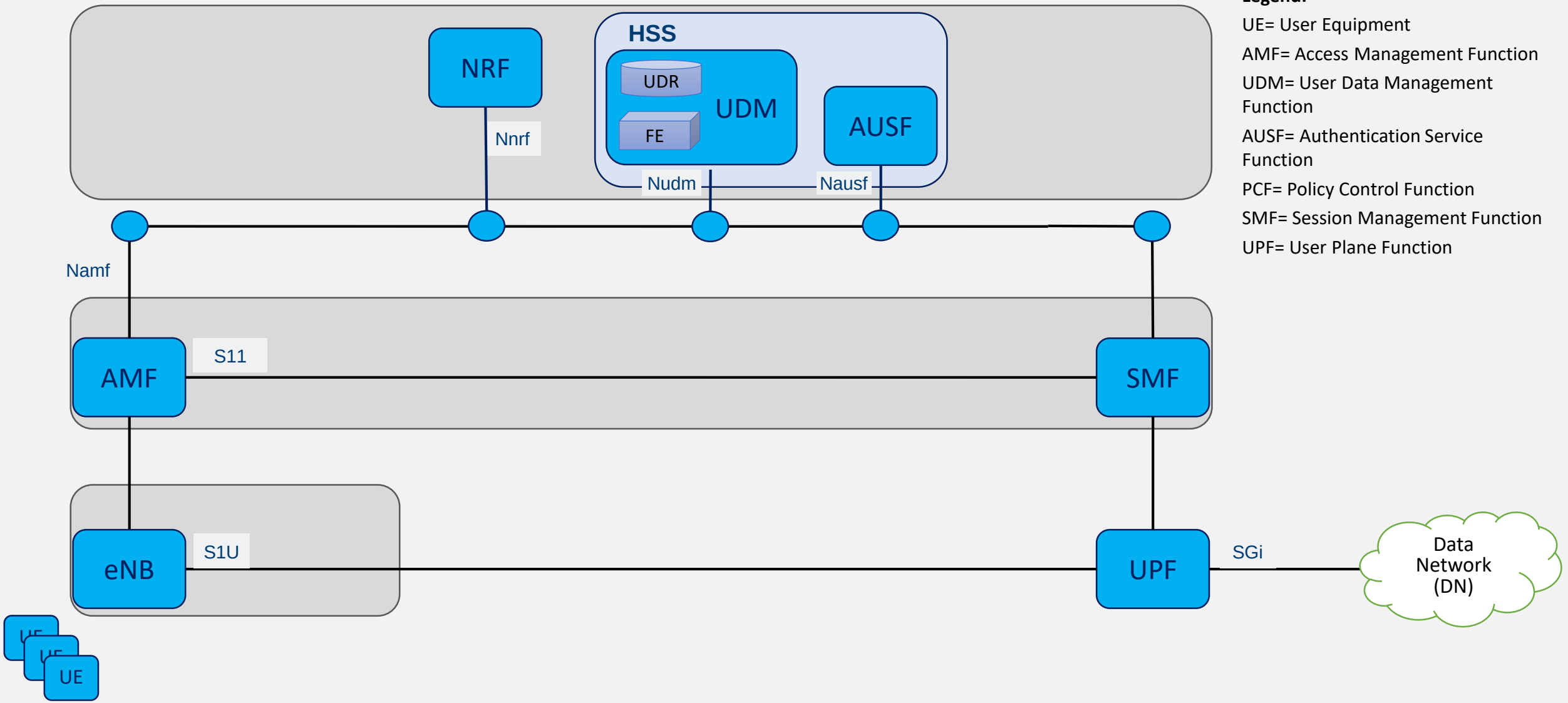

Legend:

UE= User Equipment

AMF= Access Management Function

UDM= User Data Management Function

AUSF= Authentication Service Function

PCF= Policy Control Function

SMF= Session Management Function

UPF= User Plane Function

For more information, write to us at info@gslab.com

gslab

www.gslab.com

Copyright©2019 Great Software Laboratory Private Limited.
All rights reserved.